4600

FINISHES:



CHROME



CHROME / GOLD



GOLD



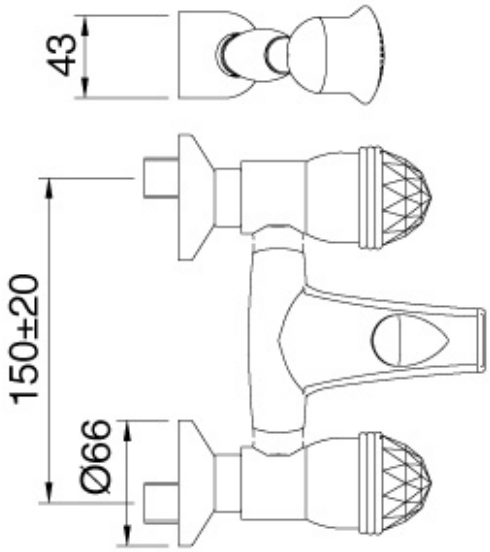

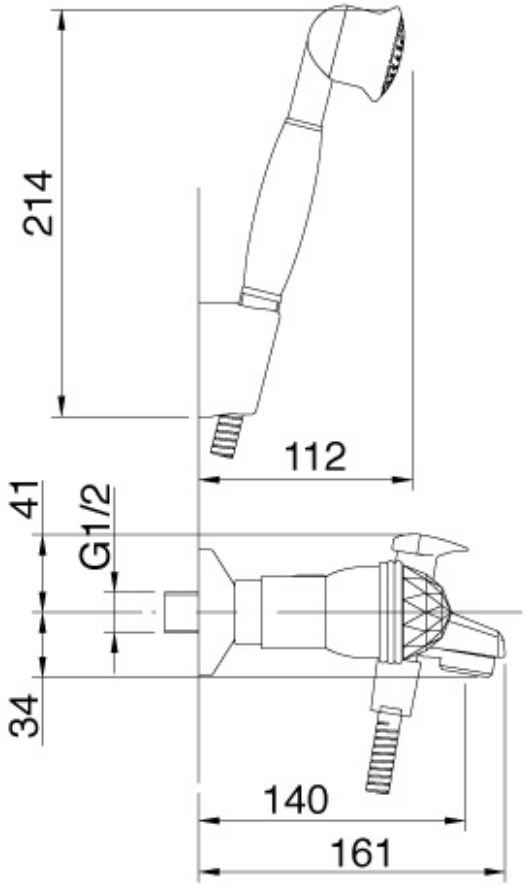

RUBINETTERIE
treemme
instruments for water