4614

FINISHES:



CHROME



CHROME / GOLD



GOLD



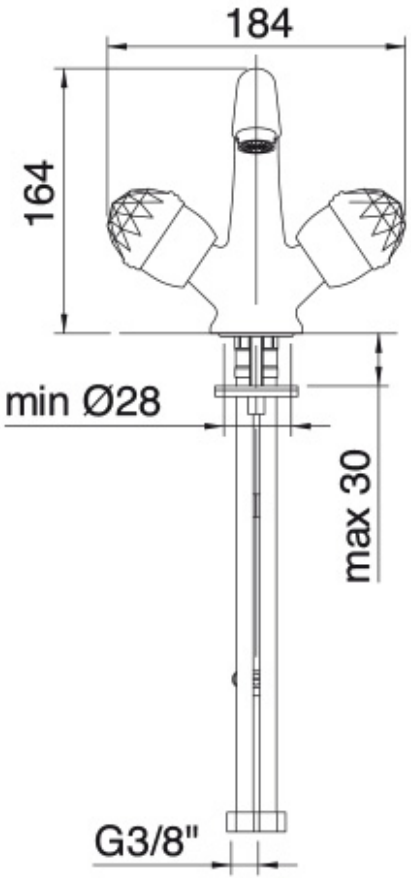

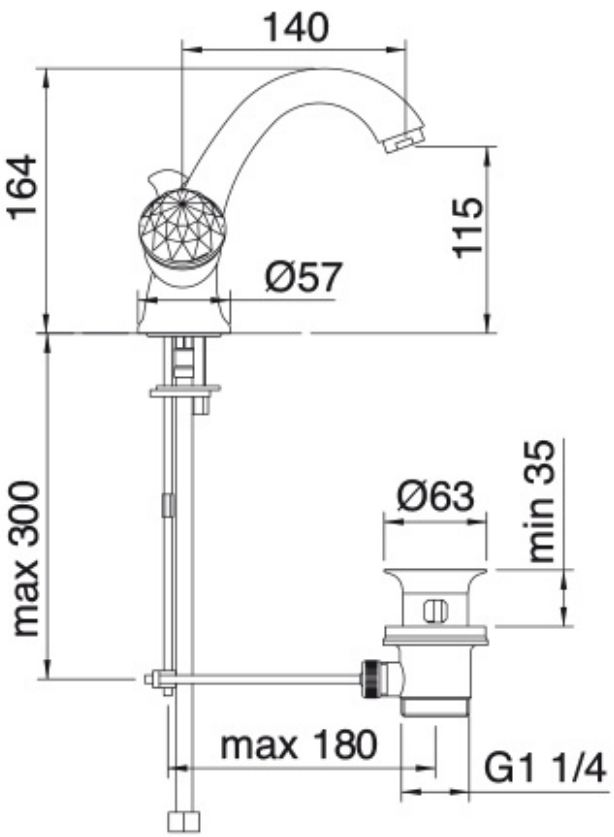

RUBINETTERIE treemme
instruments for water