# 4616

FINISHES:



CHROME



CHROME / GOLD



GOLD



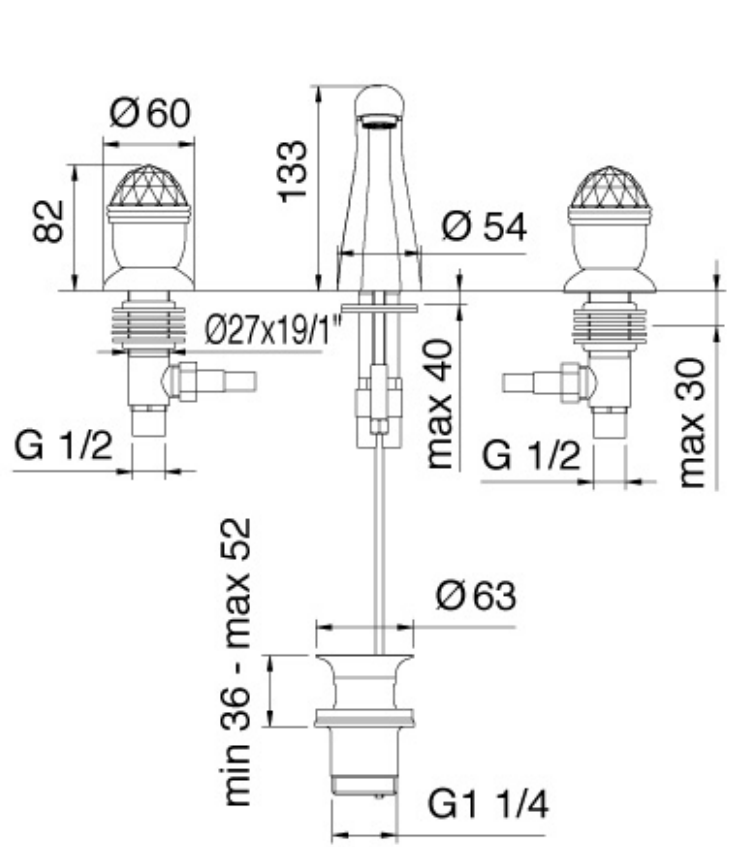


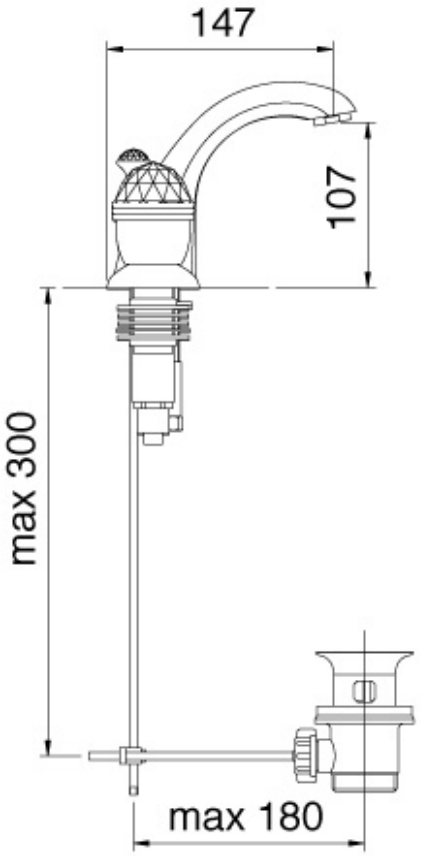


RUBINETTERIE
treemme
*instruments for water*