4620

FINISHES:



CHROME



CHROME / GOLD



GOLD



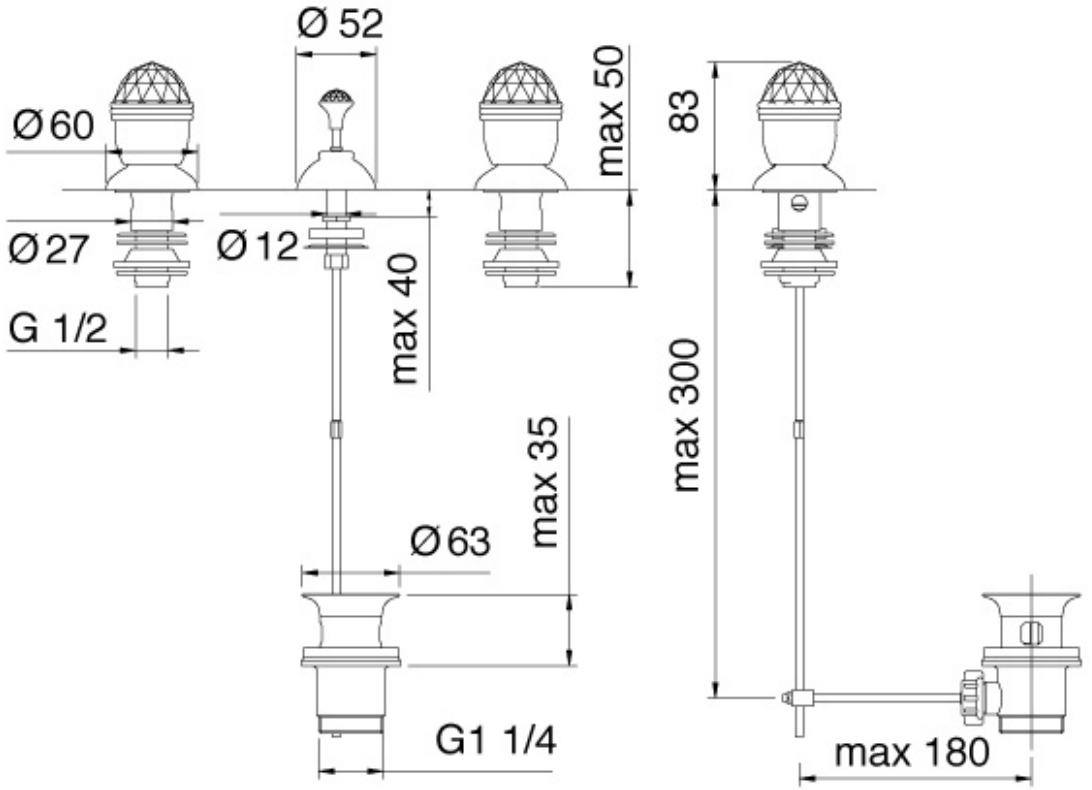

RUBINETTERIE
treemme
instruments for water