7106

FINISHES:

CHROME

GOLD



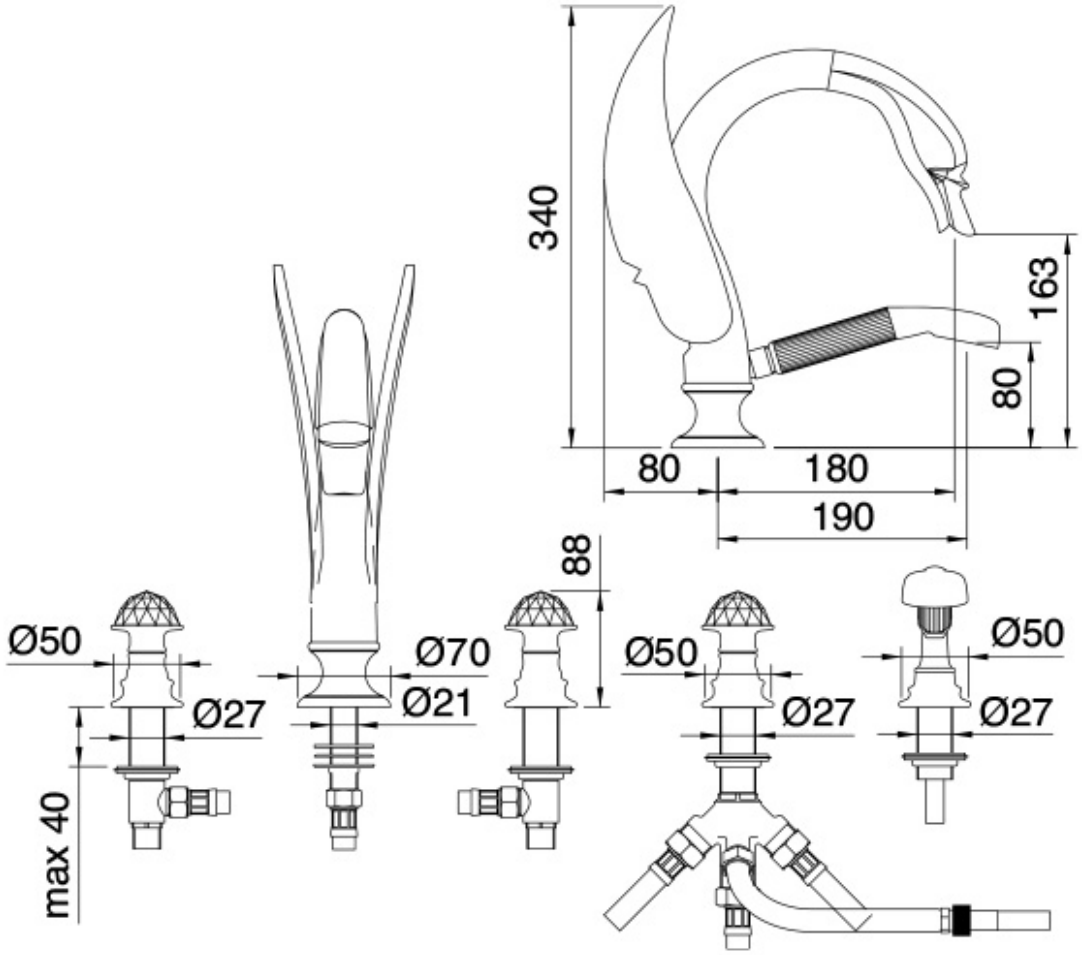

RUBINETTERIE
treemme
instruments for water