7173

FINISHES:

CHROME

GOLD



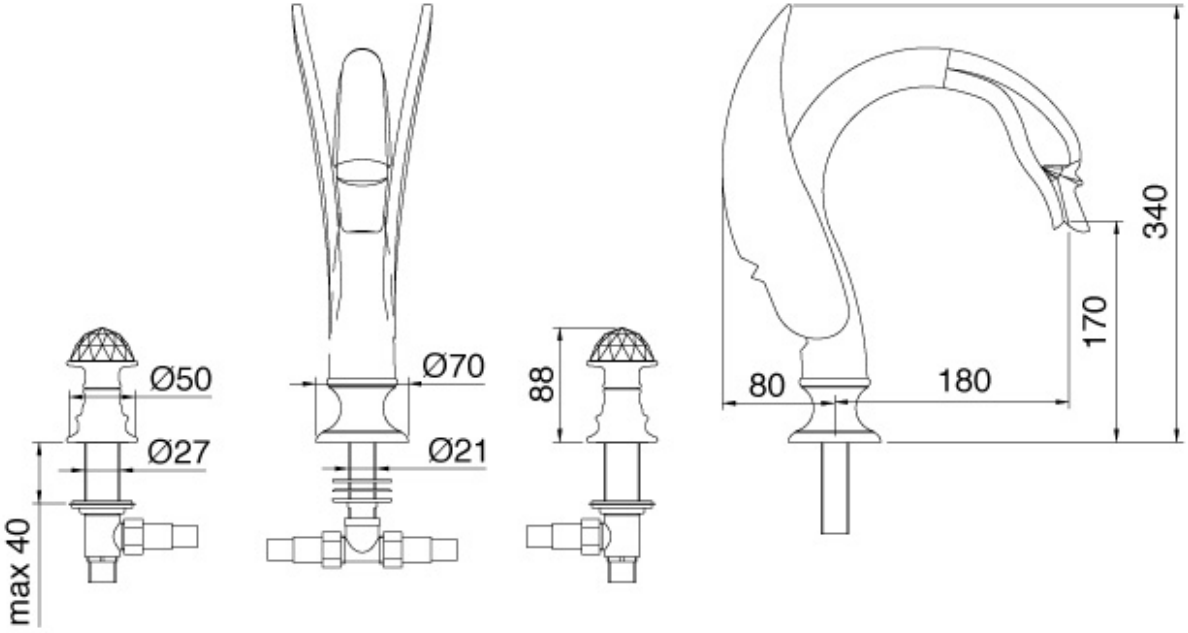

RUBINETTERIE treemme
instruments for water