IT 3A16 CC RO ZZ

FINISHES:

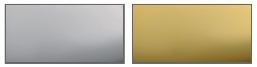

CHROME

GOLD



CUSTOM.NO



CUSTOM.NL



CUSTOM.NF



CUSTOM.HH



CUSTOM.CZ



CUSTOM.US



CUSTOM.DZ



CUSTOM.SS



CUSTOM.SZ



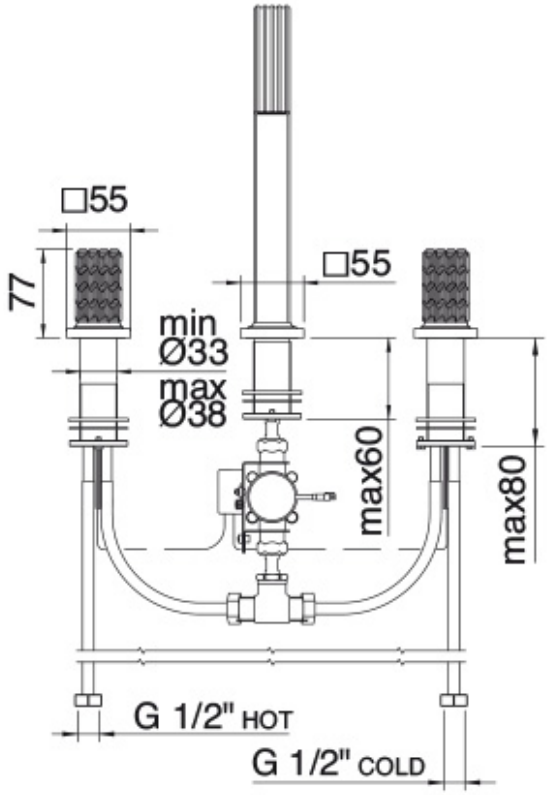

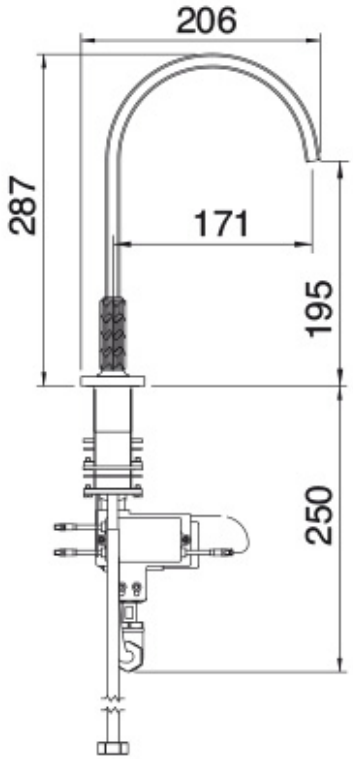

RUBINETTERIE treemme
instruments for water